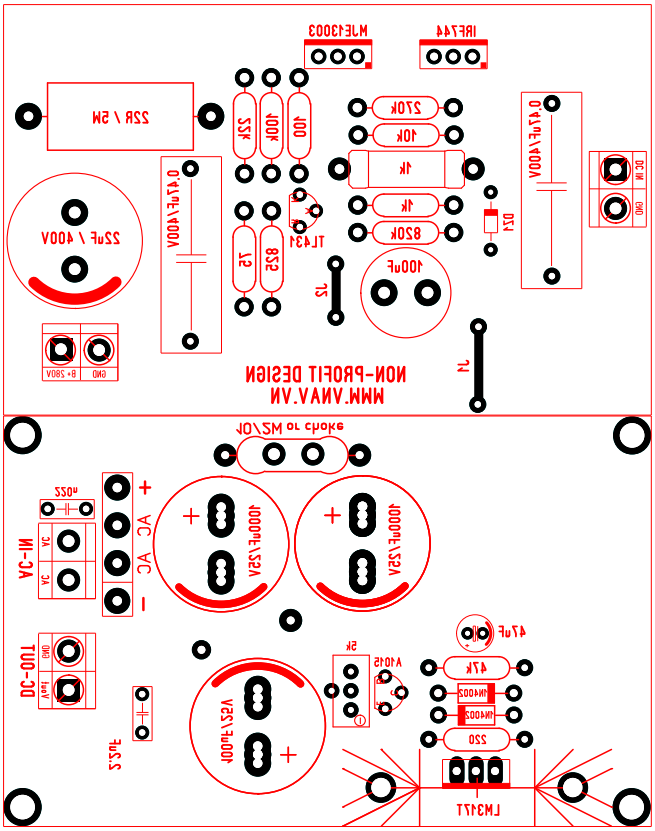
LM317T
220
4.7K
4.7uF
1N4002
1N4002
A1015
SW
1000uF/25V
1000uF/25V
10 MΩ or choke
AC
AC
+
-
IN-3V
100-DC
0.1uF
22uF / 400V
0.47uF/400V
22R / 5W
TL431
25Q
75
100
100K
22K
270K
10K
1K
4K
820K
100uF
D2
J2
J1
0.47uF/400V
IN-3V
GND
MJE13003
IRF744
NON-PROFIT DESIGN
WWW.VNAV.VN